MS SOLAR 3
SUMRALL, MS

1MMC-10016-AXX-L001 Rev. 3
Network Layout

We reserve all rights in this document and in the information contained therein. Reproduction, use or disclosure to third parties without express authority is strictly forbidden. © ABB 2007

Doc id: Rev: Dept: Creator: Filename:

Rev	Rev. Note	Date	Name
4	Switches	11.06.2017	WG
3	Tracker Control Units	10.16.2017	KH
2	Release	10.16.2017	KH
1	Preliminary	07.24.2017	AP

Based on

Prepared

Approved

Project: MS SOLAR 3 SUMRALL, MS

Title: Network Layout

ABB Power Grids

Doc.des

Doc.kind

Resp.dept. PGGA/IT

Rev.ind. Rev. 1

Lang. EN

Sheet 1

Cont. 8

Doc.No 1MMC-10016-AXX-L001

Ref.des

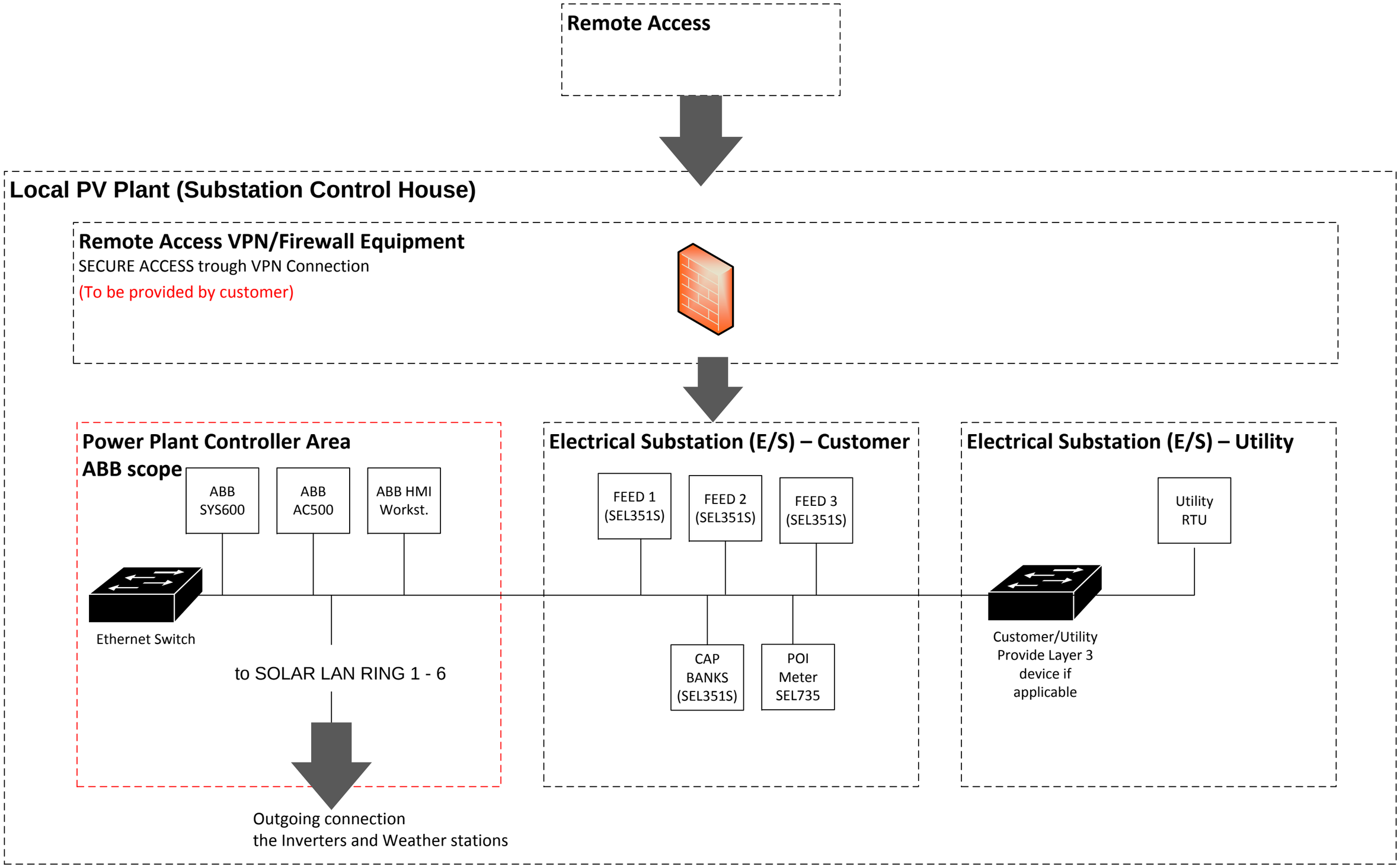

We reserve all rights in this document and in the information contained therein. Reproduction, use or disclosure to third parties without express authority is strictly forbidden. © ABB 2007

Doc id: Rev: Dept: Creator: Filename:

Rev	Rev. Note	Date	Name
4	Switches	11.06.2017	WG
3	Tracker Control Units	10.16.2017	KH
2	Release	10.16.2017	KH
1	Preliminary	07.24.2017	AP

Based on

Prepared

Approved

Project: MS SOLAR 3 SUMRALL, MS

Title: Data Network Layout Interconnection

ABB Power Grids

Doc.des

Doc.kind

Ref.des

Resp.dept. PGGA/IT

Rev.ind. Rev. 1

Lang. EN

Doc.No 1MMC-10016-AXX-L001

Sheet 2

Cont. 8

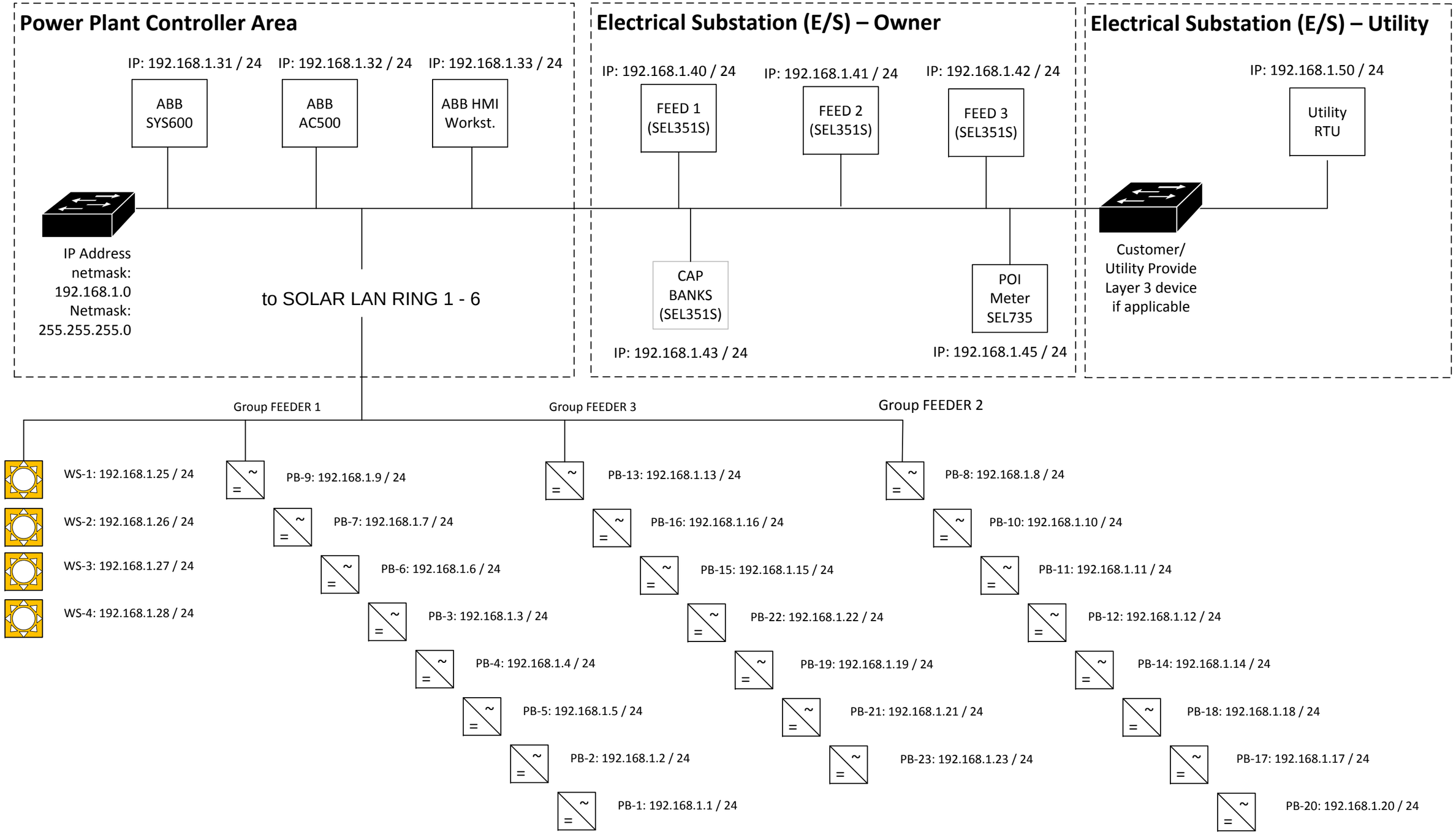

Rev	Rev. Note	Date	Name
4	Switches	11.06.2017	WG
3	Tracker Control Units	10.16.2017	KH
2	Release	10.16.2017	KH
1	Preliminary	07.24.2017	AP

Based on

Prepared

Approved

Project: MS SOLAR 3 SUMRALL, MS

Title: Network Layout - Inverter

ABB Power Grids

Doc.des

Doc.kind

Resp.dept. PGGA/IT

Rev.ind. Rev. 1

Lang. EN

Sheet 3

Cont. 8

Doc.No 1MMC-10016-AXX-L001

Ref.des

Doc id: Rev: Dept: Creator: Filename:

We reserve all rights in this document and in the information contained therein. Reproduction, use or disclosure to third parties without express authority is strictly forbidden. © ABB 2007

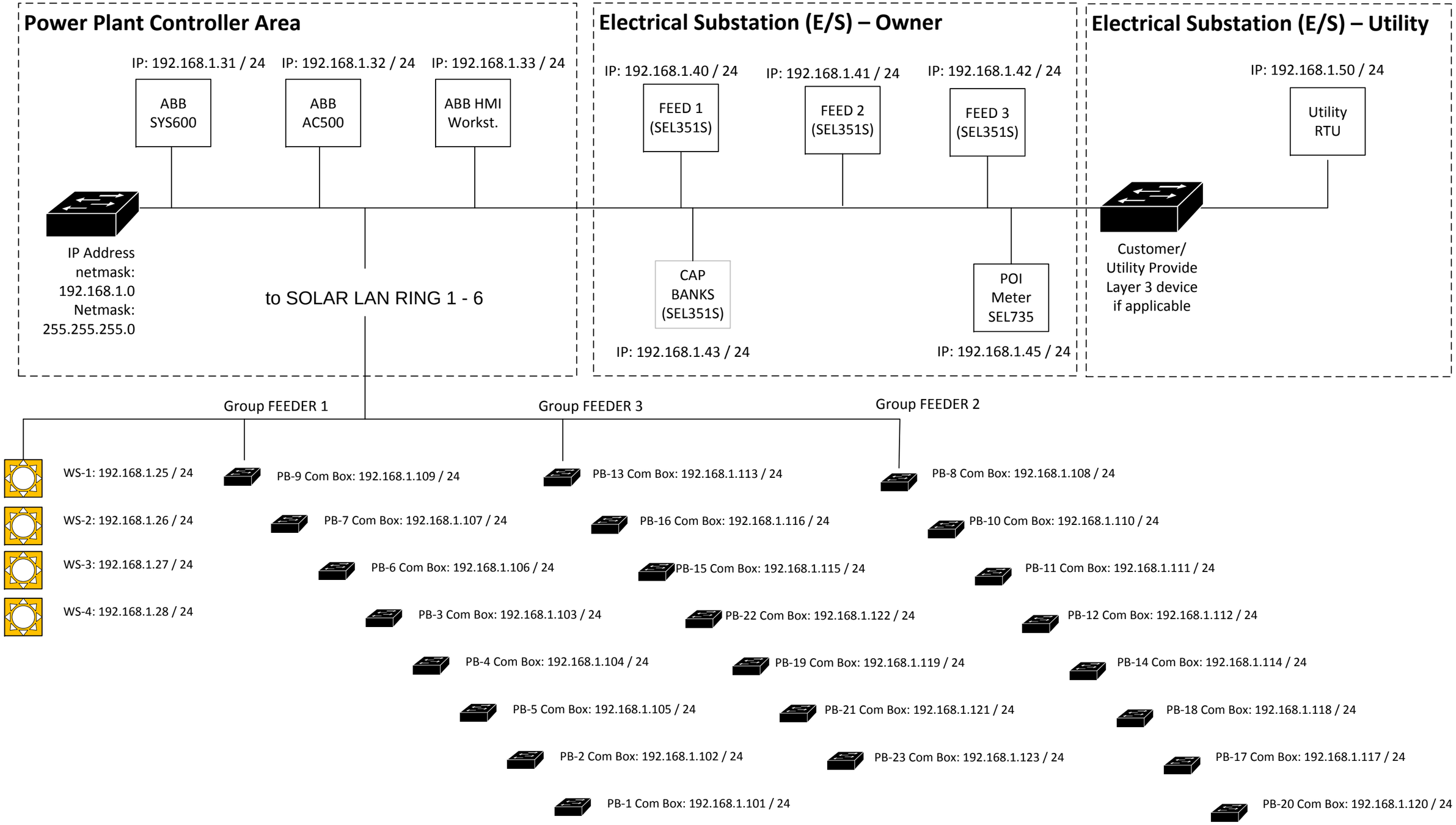

Rev	Rev. Note	Date	Name
4	Switches	11.06.2017	WG
3	Tracker Control Units	10.16.2017	KH
2	Release	10.16.2017	KH
1	Preliminary	07.24.2017	AP

Based on

Prepared

Approved

Project: MS SOLAR 3 SUMRALL, MS

Title: Network Layout – Communication Box Switch

ABB Power Grids

Doc.des

Doc.kind

Ref.des

Resp.dept. PGGA/IT | Rev.ind. Rev. 1 | Lang. EN

Doc.No 1MMC-10016-AXX-L001 | Sheet 4 | Cont. 8

Doc id: Rev: Dept: Creator: Filename:

We reserve all rights in this document and in the information contained therein. Reproduction, use or disclosure to third parties without express authority is strictly forbidden. © ABB 2007

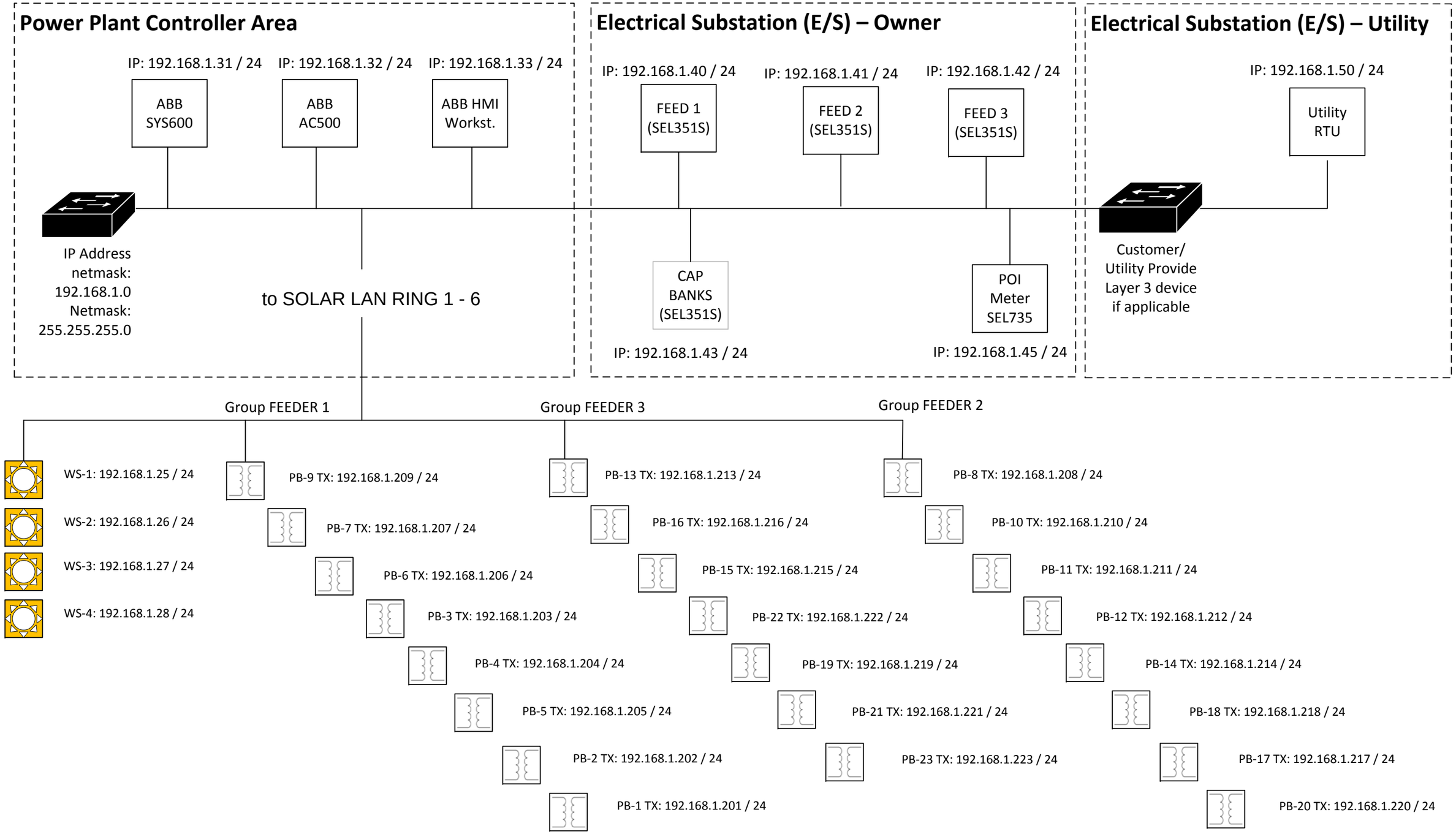

We reserve all rights in this document and in the information contained therein. Reproduction, use or disclosure to third parties without express authority is strictly forbidden. © ABB 2007

Doc id: Rev: Dept: Creator: Filename:

Based on			
4	Switches	11.06.2017	WG
3	Tracker Control Units	10.16.2017	KH
2	Release	10.16.2017	KH
1	Preliminary	07.24.2017	AP
Rev	Rev. Note	Date	Name

Prepared
Approved
Project: MS SOLAR 3 SUMRALL, MS

Title: Network Layout – Transformer RTU

ABB Power Grids

Doc.des
Doc.kind
Resp.dept. PGGA/IT
Rev.ind. Rev. 1
Lang. EN
Sheet 5
Cont. 8
Doc.No 1MMC-10016-AXX-L001

Ref.des

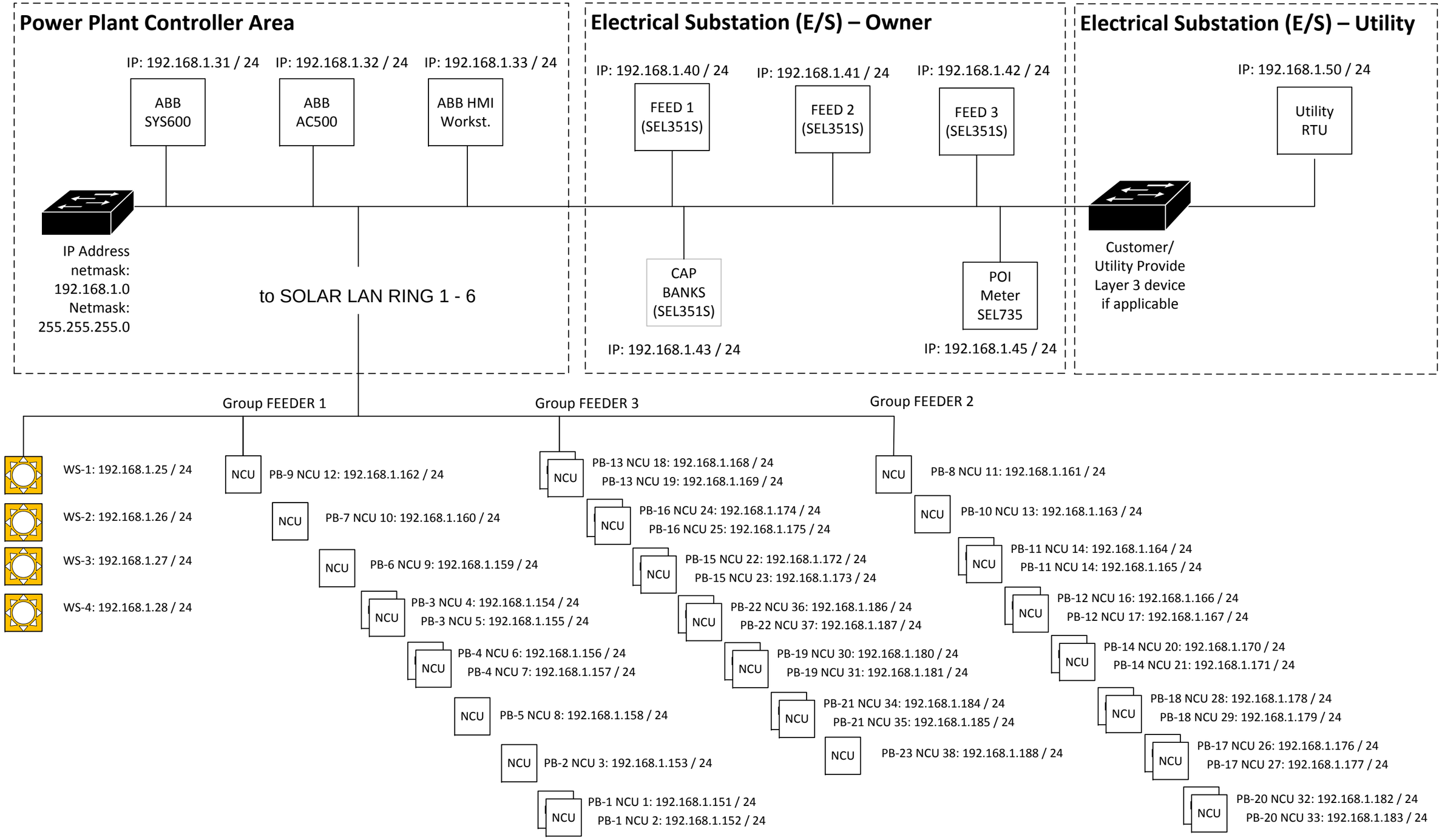

We reserve all rights in this document and in the information contained therein. Reproduction, use or disclosure to third parties without express authority is strictly forbidden. © ABB 2007

Based on			
4	Switches	11.06.2017	WG
3	Tracker Control Units	10.16.2017	KH
2	Release	10.16.2017	KH
1	Preliminary	07.24.2017	AP
Rev	Rev. Note	Date	Name

Prepared
Approved
Project: MS SOLAR 3 SUMRALL, MS

Title: Network Layout – Tracker Control Units

ABB Power Grids

Doc.des
Doc.kind
Resp.dept. PGGA/IT
Rev.ind. Rev. 1
Lang. EN
Sheet 6
Cont. 8
Doc.No 1MMC-10016-AXX-L001

Ref.des

Doc id: Rev: Dept: Creator: Filename:

Main SCADA Switch -AFS670

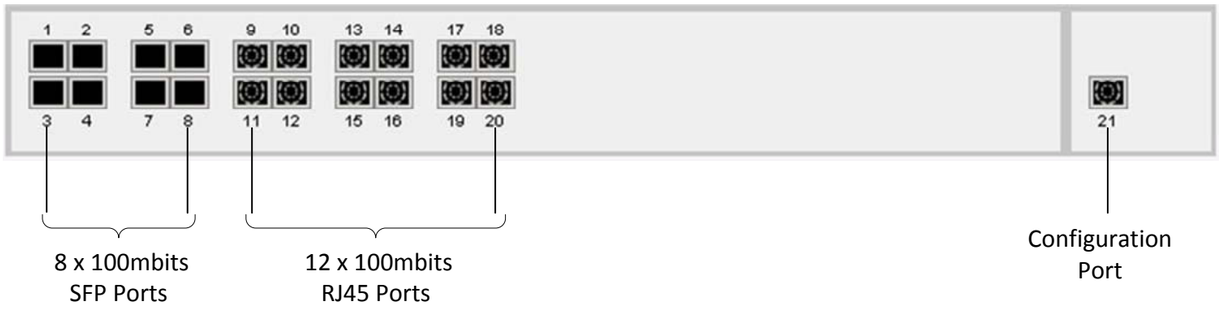

Main SCADA Switch - AFS670			
Port	Port Type	Port Name	Connection Description
1.1	SFP	Feeder 1	Fiber Link to PB-9
1.2	SFP	Feeder 2	Fiber Link to PB-8
1.3	SFP	-	Spare Port
1.4	SFP	-	Spare Port
1.5	SFP	Feeder 3	Fiber Link to PB-13
1.6	SFP	-	Spare Port
1.7	SFP	-	Spare Port
1.8	SFP	-	Spare Port
1.9	RJ45	SYS600	Ethernet Link to SCADA Server
1.10	RJ45	AC500	Ethernet Link to PPC
1.11	RJ45	F-1	Ethernet Link to Feeder 1 SEL-351-6
1.12	RJ45	F-2	Ethernet Link to Feeder 2 SEL-351-6
1.13	RJ45	F-3	Ethernet Link to Feeder 3 SEL-351-6
1.14	RJ45	F-4	Ethernet Link to Cap Bank SEL-351-6
1.15	RJ45	POI	Ethernet Link to POI Meter SEL-735
1.16	RJ45	VPN	Ethernet Link to Firewall/Router
1.17	RJ45	O&M	Ethernet Link to O&M Server
1.18	RJ45	-	Spare Port
1.19	RJ45	-	Spare Port
1.20	RJ45	-	Spare Port
1.21	RJ45	Config	Configuration Port

Communication Box Switch – AFS660

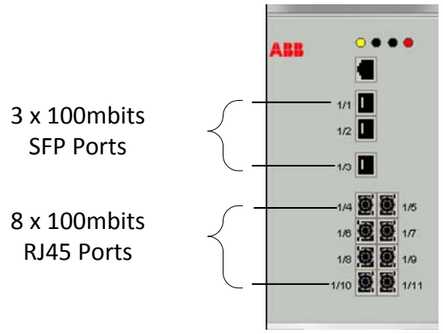

Communication Box Switch - AFS660			
Port	Port Type	Port Name	Connection Description
1.1	SFP	AFS670-1.....n	Fiber Link Next Inverter Upstream
1.2	SFP	AFS670-1.....n	Fibre Link Next Inverter Downstream
1.3	SFP	-	Spare
1.4	RJ45	Inverter-1....n	Ethernet Link to Inverter
1.5	RJ45	Transformer-1...n	Ethernet Link to Transformer RTU
1.6	RJ45	MET Station - 1 ...n	Meteorological Station
1.7	RJ45	NCU 1	Ethernet Link to NCU 1
1.8	RJ45	NCU 2	Ethernet Link to NCU 2
1.9	RJ45	-	Spare
1.10	RJ45	-	Spare
1.11	RJ45	-	Spare

Transformer RTU – ioLogik E1210

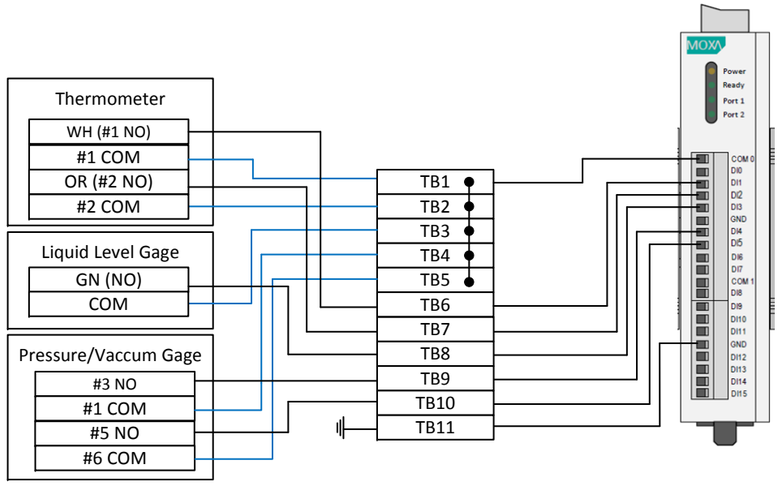

We reserve all rights in this document and in the information contained therein. Reproduction, use or disclosure to third parties without express authority is strictly forbidden. © ABB 2007

Doc id: Rev: Dept: Creator: Filename:

Rev	Rev. Note	Date	Name
4	Switches	11.06.2017	WG
3	Tracker Control Units	10.16.2017	KH
2	Release	10.16.2017	KH
1	Preliminary	07.24.2017	AP

Based on

Prepared

Approved

Project: MS SOLAR 3 SUMRALL, MS

Title: Network Layout – Switch Connection

ABB Power Grids

Doc.des

Doc.kind

Ref.des

Resp.dept. PGGA

Rev.ind. Rev. 1

Lang. EN

Doc.No 1MMC-10016-AXX-L001

Sheet 7

Cont. 8